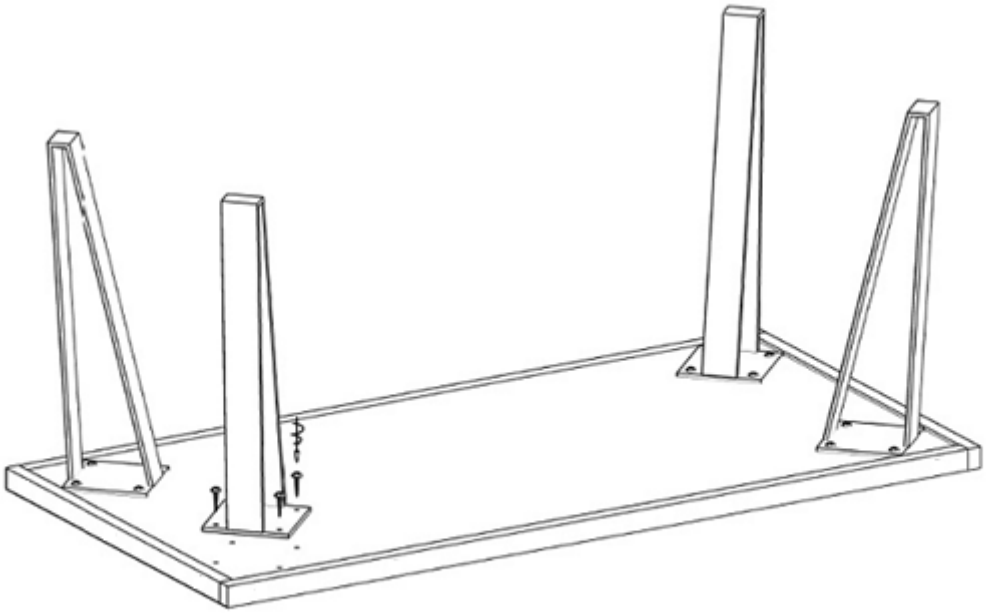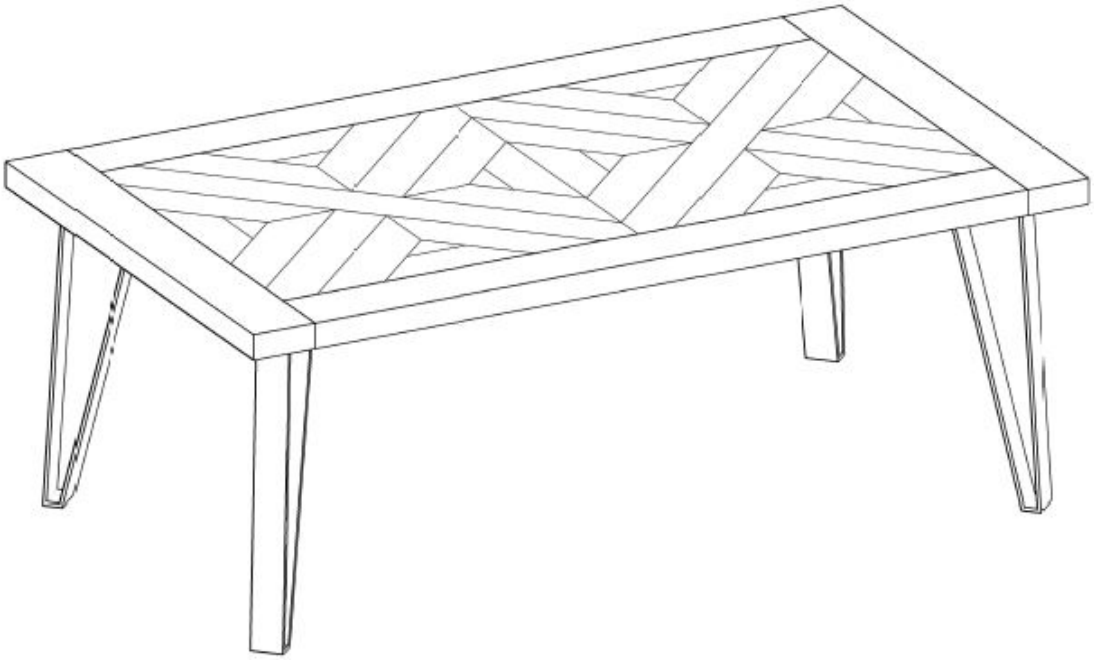10 min
x16
4x20 mm